ISSUE NO.	DATE
1	6-23-2009

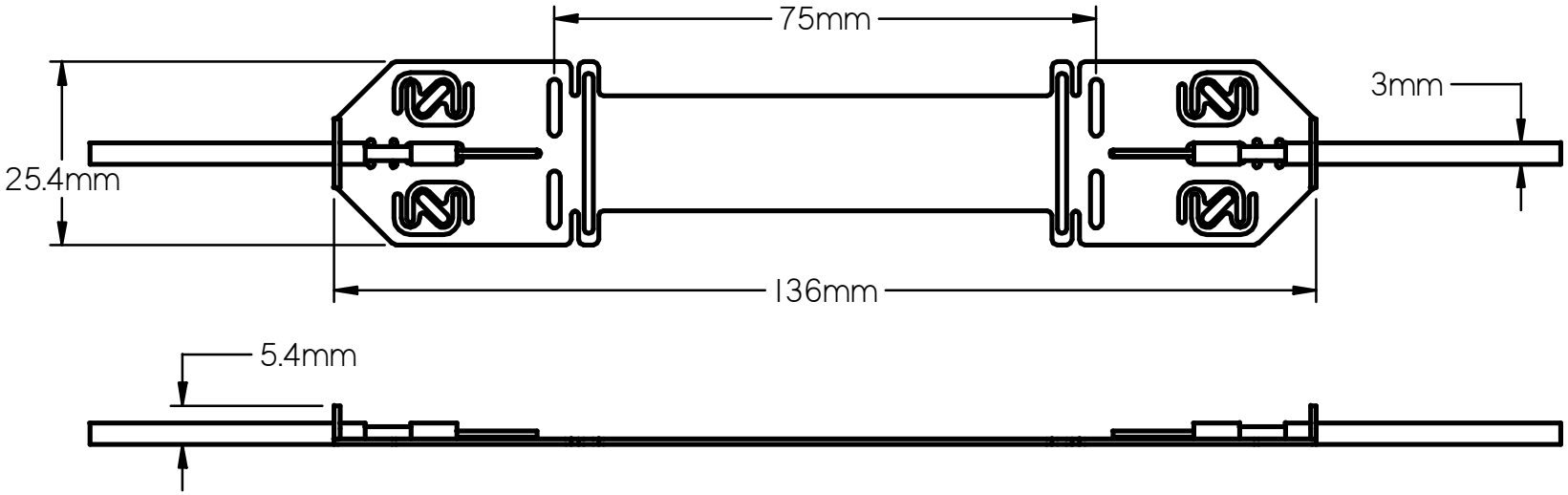

os3150
Assembly

GENERAL TOLERANCES:

UNLESS OTHERWISE SPECIFIED, BREAK ALL SHARP EDGES .005/.010 X 45

4 PLACE DECIMAL +/- .0005
3 PLACE DECIMAL +/- .002
2 PLACE DECIMAL +/- .010
ANGULAR DIM. +/- 1

THIS ENGLISH DRAWING HAS BEEN PREPARED IN ACCORDANCE WITH ANSI Y14.5M - 1982. DIMMENSIONS SHOWN IN BRACKETS [] ARE MILLIMETERS AND FOR REFERENCE.

DESIGNED BY	DRAWN BY	FINAL APPROVAL	SIZE	SHEET NO.
SKF	SKF		A	1

MICRON OPTICS

DRAWING NO.
222811

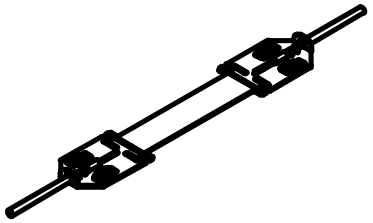

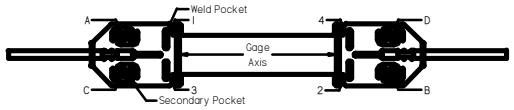

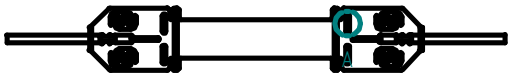

DETAIL A

MICRON OPTICS

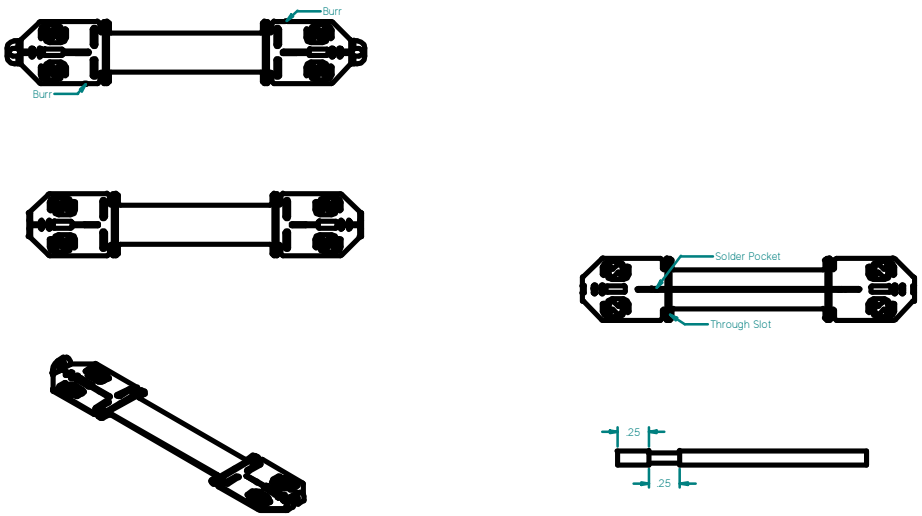

GENERAL TOL. BRANCH
4 PLACE DECIMAL +/- .0002
3 PLACE DECIMAL +/- .0005
UNLESS OTHERWISE SPECIFIED, BREAK 2 PLACE DECIMAL +/- .010
ALL SHARP EDGES .005/.010 X 45 ANGULAR DIM. +/- 1
THIS DRAWING HAS BEEN PREPARED IN ACCORDANCE WITH ANSI Y14.5M - 1982. DIMENSIONS SHOWN IN BRACKETS IS ARE MILLIMETERS AND FOR REFERENCE

REVISIONS	DATE	DWN.	APPROVAL	DATE

MICRON OPTICS

DRAWING NO.